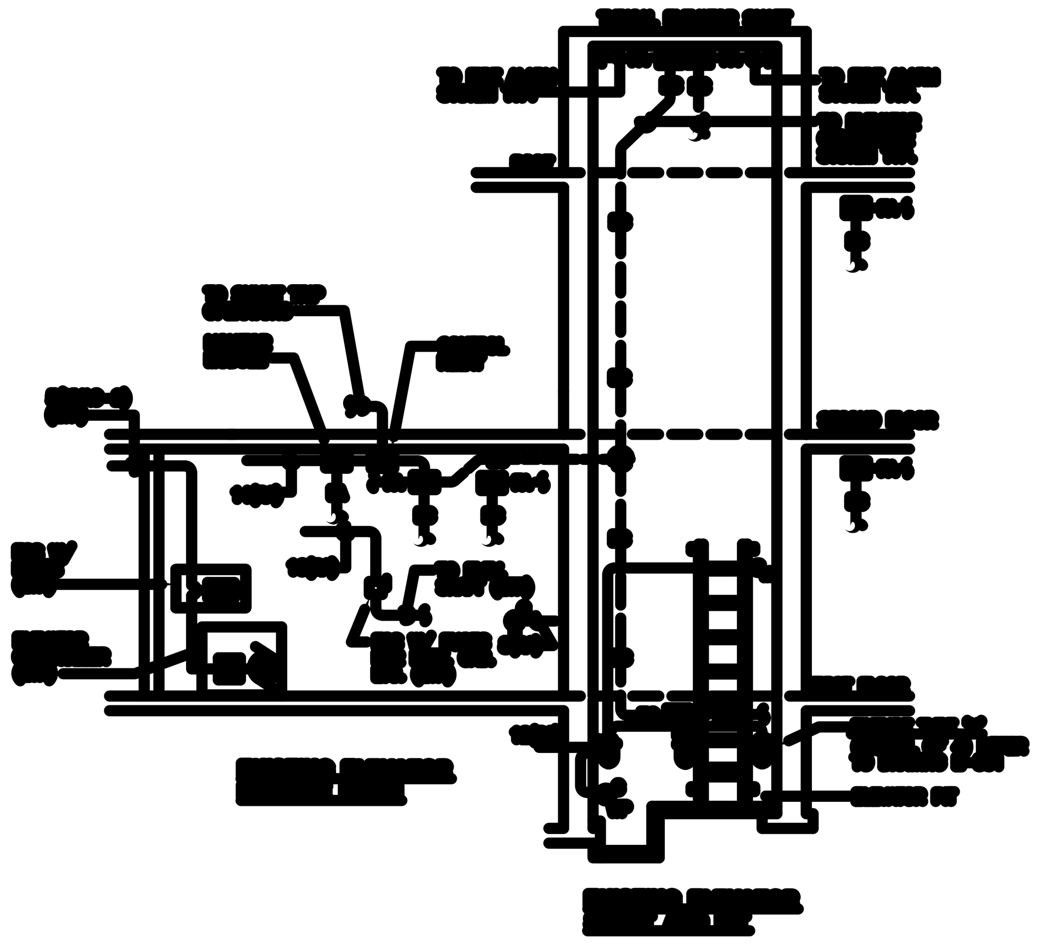

2 DIAGRAM - [illegible]

[illegible]

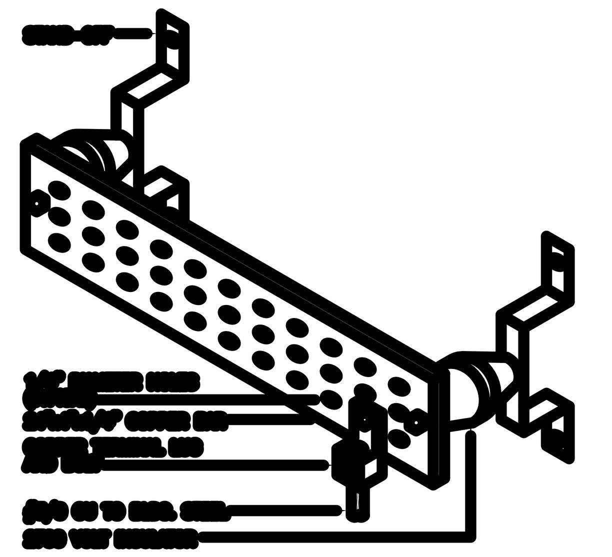

3 GROUND BUS BAR DETAIL

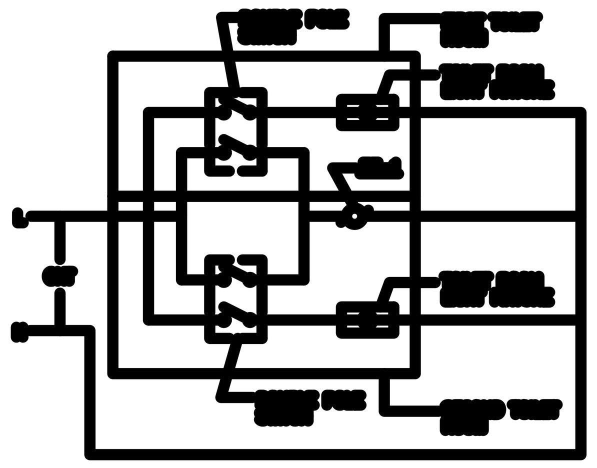

4 TOILET ROOM FAN AND LIGHTS WIRING DIAGRAM

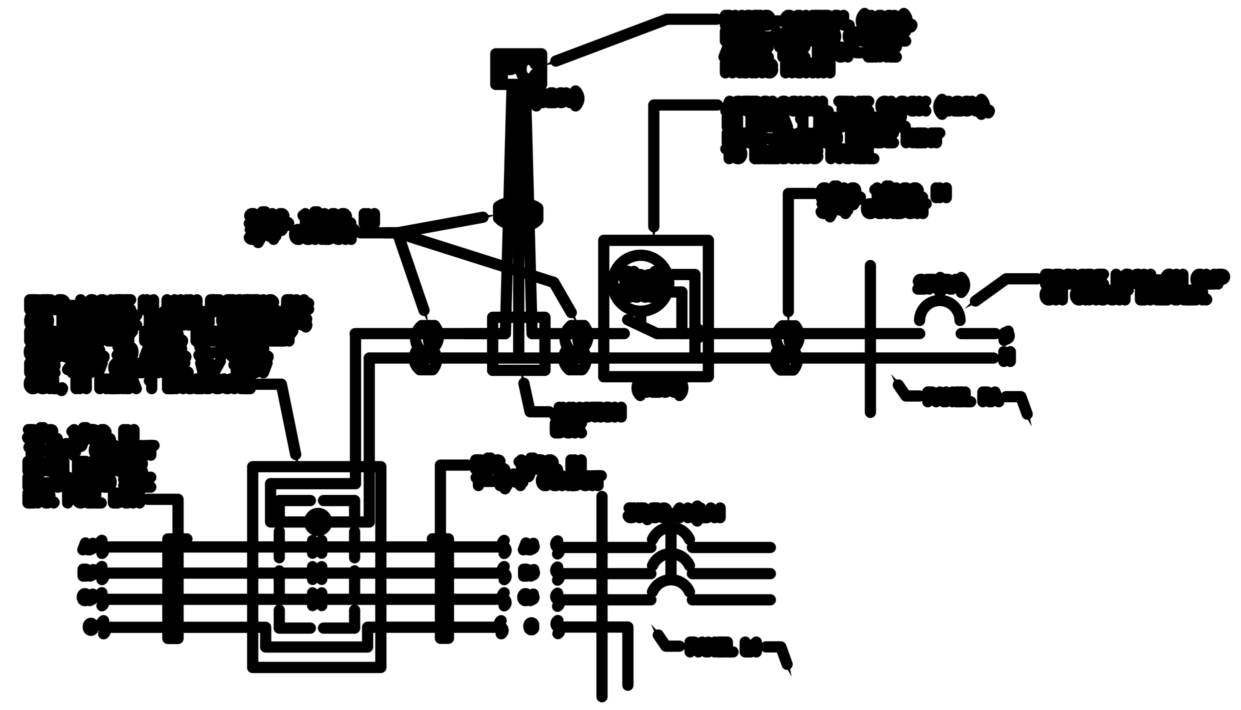

5 DIAGRAM - SITE POLE LIGHTING CONTROLS

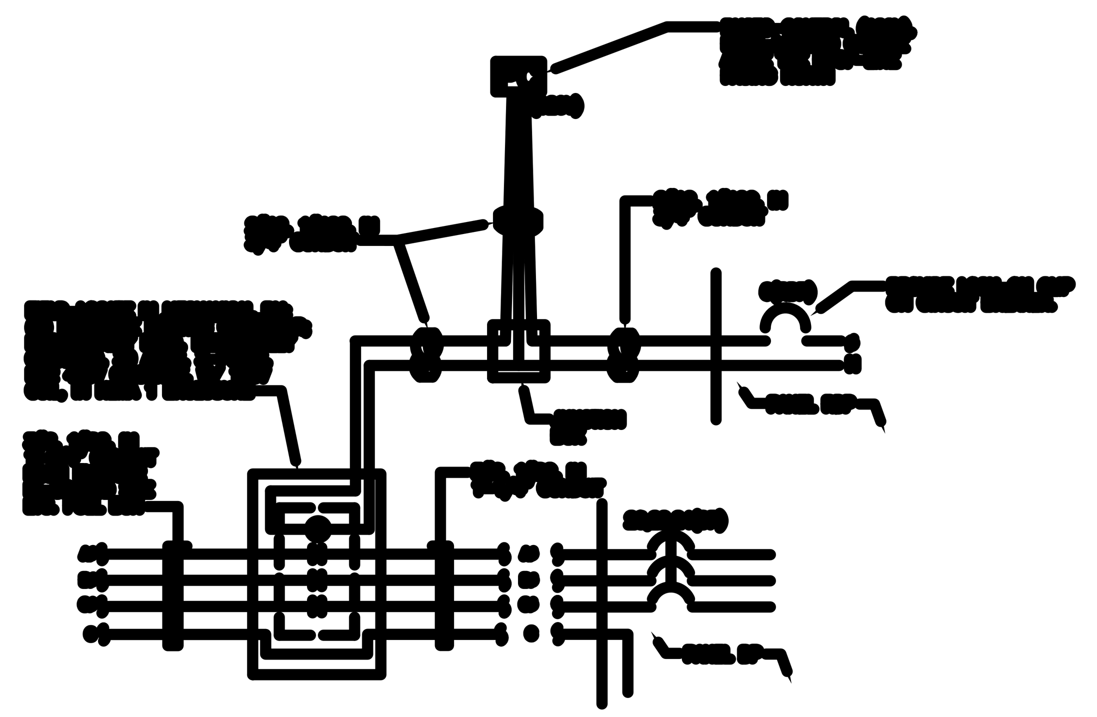

6 DIAGRAM - SITE POLE LIGHTING CONTROLS FOR NIGHT LIGHT (NL) (ON @ DUSK & OFF @ DAWN)

1 FIRE ALARM RISER DIAGRAM - NEW

[illegible]

[illegible]

[illegible]

REVISIONS

NO.	DATE	REMARKS	NO.	DATE	REMARKS

SCHLENGER / PITZ & Associates, Inc.
Consulting Engineers
West Aylesbury Road, Timonium, MD 21093 Phone 410.561.1337 Fax 410.561.1446
Old Farm Lane Shrewsbury, PA 17361 Phone 717.227.2320 Fax 717.227.9916
North Main Street Selbyville, DE 19975 Phone 302.436.2733 Fax 302.436.5211
www.spaengineers.com

© Copyright 2006

IOTT
ARCHITECTURE
ENGINEERING
INCORPORATED
310 HAMMOND ST. • SUITE 100 SALISBURY, MARYLAND
(410) 749-7229 • FAX (410) 749-0001

TRI - COUNTY COUNCIL
REGIONAL CENTER
ROUTE 50 , EAST
SALISBURY, MARYLAND

ELECTRICAL DIAGRAMS AND DETAILS

PRINT DATE: 11/01/10
SPA PROJ. NO: 2009.026
DESIGN BY: DAS/MEH
DRAWN BY: MEH
SCALE: AS NOTED
STAGE: ISSUED FOR BID
DWG. FILE: 2009.0264_E50

E
502

SHEET: 25 OF 25
ISSUED DATE: 11/01/10

2009.0264